# BX-S3000P2
# BX-S3000P2A

*Fan-Less BOX-PC with Intel® 6th Skylake Platform*

CONTEC

## Features

- Passive cooling for greater reliability
- Two 2.5" storage devices (up to 2.5 TB each): RAID 0,1
- Expandable design with mini-PCIe and M.2 expansion card supported
- Support faster DDR memory (up to DDR4 2400)
- Graphics: Microarchitecture Improvements/3D,Gen9
- Two expansion slots (PCIe x8 or PCI)
- Media Engine Improvements: MFX Decode / image RAW

## Optional Configuration

- 2x 2.5" Drive Bay
- 3x RS232, 1x RS232/422/485, 1x GPIO(DB9)
- 1x M.2 Key M Support(PCIe x4 / SATA / SMBus)
- 1x Mini-PCIe Card Slot
- 2x Expansion slot (PCIe x8, BX-S3000P2 Model)
- 2x Expansion slot (PCI, BX-S3000P2A Model)
- AC adapter 24V/120W
- OS Win7 / Win8.1 / Win10

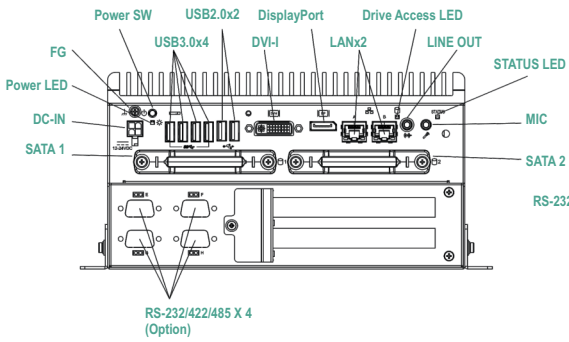


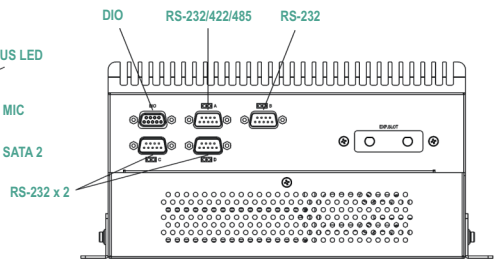

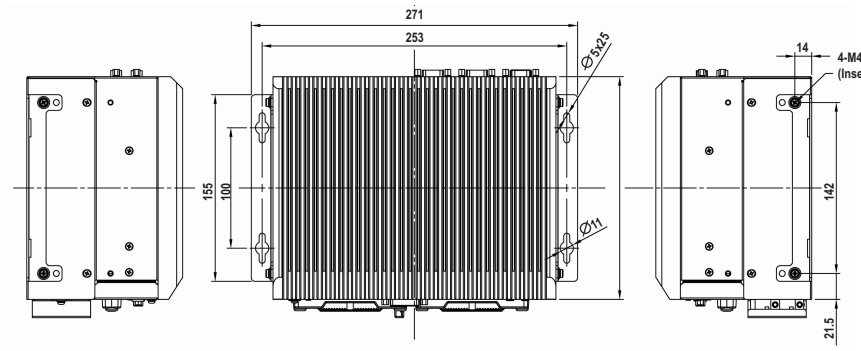


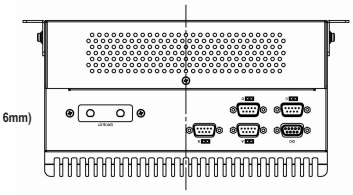

[mm]

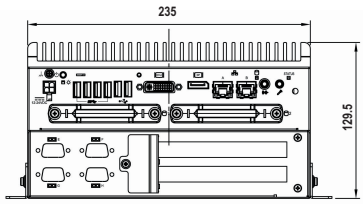


129.5(140*)

*Standard temperature HDD: The height is 140mm when using attached rubber foot.

## Specifications

| | | |
|---|---|---|
| System | CPU | 6th Generation Skylake Intel® Core™ i7-6700TE Processor<br>6th Generation Skylake Intel® Core™ i5-6500TE Processor<br>6th Generation Skylake Intel® Celeron® G3900TE Processor |
| | CHIPSET | Intel® Q170 Controller Hub |
| | SYSTEM MEMORY | DDR4 2133/2400, 260-pin SO-DIMM x 2, Max. 32 GB (Non-ECC) |
| | GRAPHICS | Intel® HD Graphics |
| | DISPLAY INTERFACE | DP, DVI-I (DVI-D + VGA), LVDS (Internal) |
| | STORAGE SLOT | 2.5" HDD/SSD x 2 (Removeable Bay)<br>M.2 key M 2242 x 1 |
| | ETHERNET | Intel® I219-LM(PHY) & Intel® I210-AT(Wake On LAN support) |
| | AUDIO CODEC | Realtek ALC892-CG |
| | AUDIO | Mic-in, Line-out |
| | SUPER I/O | NUVOTON NCT6106D |
| | EXPANSION SLOT | Mini-PCI/e x 1<br>M.2 key M 2242(Reserve) x 1<br>Maximum Card Size: 111.15 mm (H) x 167.65mm (L) (Without the I/O Bracket)<br>PCIe x8 2 Slot (BX-S3000P2 Model)<br>PCI 2 Slot (BX-S3000P2A Model) |
| | INTERFACE | Mic-in x 1 and Line-out(front panel) x 1<br>USB 3.0 x 4 (front panel)<br>USB 2.0 x 2 (front panel)<br>USB 2.0 x 2 (internal) 4 pin(Reserve)<br>4 PIN power jack x 1<br>Software-programmable RS-232 / 422 / 485 ports x 1 (Rear panel)<br>RS-232 male ports x3 (Rear panel)<br>6 bit programable + control power button DIO Port<br>TPM 2.0, RAID(0,1), iAMT(11.0)<br>Power Button(Front Panel) x 1 |
| Power Requirement | POWER INPUT | 12~24V(±10%,DC10.8-26.4V) Wide Rage DC Input w/ Terminal Block Connectivity |
| | POWER ADAPTER | AC to DC, DC 24V/ 5A, 120W adaptor<br>w/ Terminal Block Connectivity |
| Mechanical | THERMAL DESIGN | Fanless |
| | MOUNTING | Wall mount / Desktop |
| | DIMENSIONS (W X D X H) | 235(W) x 185(D) x 129.5(H) mm (No protrusions) |
| | WEIGHT | 4.6 kg |
| | MATERIAL | Top cover: Aluminum Alloy , Bezel and chassis: Steel |
| Environmental | OPERATING TEMPERATURE | 0°C~50°C with Air Flow: 0.5 m/s (w/ Standard Temp. SSD) (w/ Extended Temp. M.2 / mPCIE)<br>0°C~40°C with Air Flow: 0.6 m/s (w/ Standard Temp. HDD) (w/ Extended Temp. M.2 / mPCIE) |
| | EXPANSION SLOT POWER CONSUMPTION | BX-S3000P2 Model:<br>Standard Temp. SSD / Extended Temp. M.2 / mPCIE Total 25W<br>Standard Temp. HDD / Extended Temp. M.2 / mPCIE Total 10W<br>BX-S3000P2A Model:<br>Standard Temp. Storage / Extended Temp. M.2 / mPCIE Total 25W |
| | STORAGE TEMPERATURE | -10~60°C |
| | OPERATING HUMIDITY | 10%~90% (Non-condensing) |
| | VIBRATION RESISTANCE | JIS C 60068-2-6:2010<br>HDD (Operating): 10 ~ 50Hz/4.9m/s2 (0.5G); 1oct/min, 1 cycle(10-50-10 Hz) ; 5 cycles X,Y,Z per axis(25 mins/axis)<br>SSD (Operating): 10 ~ 57 Hz / 0.15 mm (0-p); 57 ~ 150 Hz / 19.6 m/s2 (2G); 1 oct/min, 1 cycle(10-150-10 Hz) ;<br>5 cycles X,Y,Z per axis(40 mins/axis) |
| | SHOCK RESISTANCE | JIS-60068-2-27<br>98m/s$^2$ (10G) / 11ms / half sine; 3 times X,Y,Z per axis |
| | CERTIFICATION | CE(including LVD) & FCC / RoHS 2.0 |
| OS | OS SUPPORT | Windows® 10 IOT Enterprise LTSB 2016 (64-bit), Windows® 8.1 (64-bit), Windows® 7 (32/64-bit) English |

## Ordering Guide

| | |
|---|---|
| • BX-S3000P2-DC1800000 | Base model with Intel® Celeron® G3900TE, DDR4 8GB Memory, 2x PCIe(x8) Slot |
| • BX-S3000P2-DC4800000 | Base model with Intel® Core™ i5-6500TE, DDR4 8GB Memory, 2x PCIe(x8) Slot |
| • BX-S3000P2-DC5800000 | Base model with Intel® Core™ i7-6700TE, DDR4 8GB Memory, 2x PCIe(x8) Slot |
| • BX-S3000P2A-DC1800000 | Base model with Intel® Celeron® G3900TE, DDR4 8GB Memory, 2x PCI Slot |
| • BX-S3000P2A-DC4800000 | Base model with Intel® Core™ i5-6500TE, DDR4 8GB Memory, 2x PCI Slot |
| • BX-S3000P2A-DC5800000 | Base model with Intel® Core™ i7-6700TE, DDR4 8GB Memory, 2x PCI Slot |